天立电机（宁波）有限公司
Tianli Electrical Machinery(Ningbo)Co.，Ltd

ALWAYS RoHS compliant

PCB terminal block — TLM series（Screwless Type）— TLM-203B-5.0

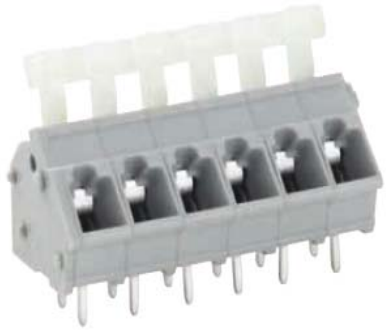

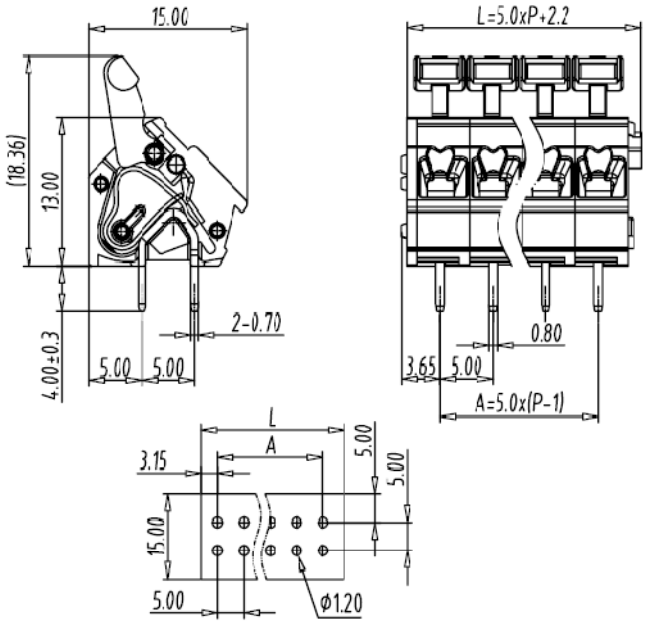

图示(Pic. shown)：TLM-203B-5.0-06P-M19

General.	PCB termial block Rated : 320V,24A，0.2~2.5mm^2
	Single row , 5.00mm pitch， 02-24 Pole
	Wiring orientation: 45°(wire to plug-in)
	Screwless Type

认证（Approval）:

技术参数Technical Data

	UL standard			IEC standard		
UL应用组别(UL Application group)	UL Application group			IEC过电压别/污染等级(IEC overvoltage category /pollution degree)		
IEC过电压别/污染等级(IEC overvoltage category /pollution degree)	B	C	D	III / 3	III / 2	II / 2
额定电压(Rated voltage)	300V	/	300V	250V	320V	/
额定电流(Rated current)	16A	/	10A	24A	24A	/
额定连接容量(Rated connection capacity)	28-12AWG Sol&Str			0.2~2.5mm^2 Sol&Str		

绝缘材料(Insulation Material)	PA66；UL94-V0
电流承载部件材料和镀层(Material & Plating of Current carrier)	Copper alloy ，Tin plated
接线弹片材料(Material of Clamp spring)	Stainless Steel
绝缘电阻(Insulation Resistance)	500MΩ or more at DC500V
耐电压(1分钟)(Withstanding Voltage/1Min)	AC2200V/Min
额定冲击电压(Rated surge voltage)	4.0KV
接线螺丝(Wire clamp unit Screw)，最大扭矩(torque Max.)	--
固定螺丝(Mounting Screw)，扭矩(torque)	--
剥线长度(Wire stripping length)	6.0mm
使用温度(Operating temperature)	-40°C up to +115°C
焊接方式(Soldering recommend)	Wave soldering ,260°C 5S Max (Single Wave) , 260°C 10S Max(Double Wave)

订购方式(How to order)

TLM	203	B	5.0	XXXX	XXP	M19
Series No. 系列号	Differentiate Number 区分号	LEVER 按键	Pitch:5.0mm 间距=5.0mm	Special code 特编号 XXXX=custom-made blank=standard	No. of Poles 极数 02-24P	Color 颜色 Grey: M19

Web:wwww.china-tianli.com TEL:+86-574-6347-9600,6389-6436 Mail : sale@china-tianli.cn
地址:中国浙江省宁波杭州湾新区庵东工业园区纬三路138号
ADD：138，Weisan Rd.,Andong Development Zone,Hangzhou Bay Area,Ningbo,Zhejiang,China