天立电机（宁波）有限公司
Tianli Electrical Machinery(Ningbo)Co.，Ltd

ALWAYS RoHS compliant

PCB terminal block — BARRIER SERIES—B950CW-03

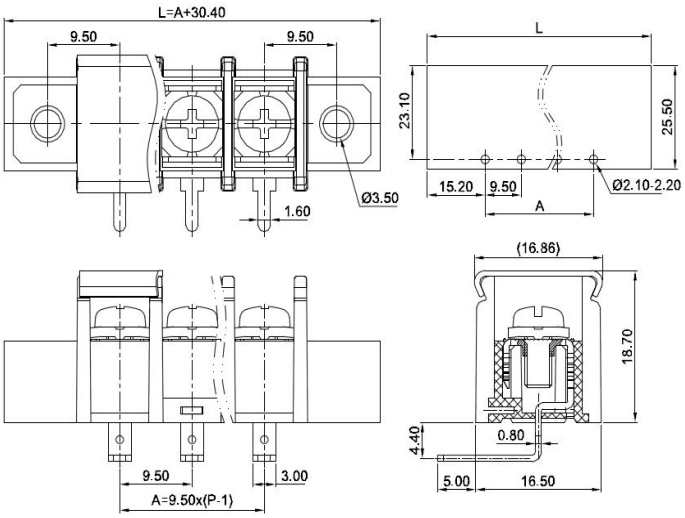

图示(Pic. shown)：B950CW-03-05P-KC

General.	PCB termial block Rated : 300V,25A，22-10 Sol＆Str
	Single row , 9.50mm pitch， 02-24 Pole
	Wiring orientation: 90°(wire-to-board)
	Screw clamp unit: M3.5, 1.0Nm Max

认证（Approval）：

技术参数Technical Data

	UL standard			IEC standard		
UL应用组别(UL Application group)	UL Application group			IEC过电压别/污染等级(IEC overvoltage category /pollution degree)		
IEC过电压别/污染等级(IEC overvoltage category /pollution degree)	B	C	D	III / 3	III / 2	II / 2
额定电压(Rated voltage)	300V	--	300V	--	--	--
额定电流(Rated current)	25A	--	10A	--	--	--
额定连接容量(Rated connection capacity)	22-10AWG Sol&Str			--		

绝缘材料(Insulation Material)	PA66 UL94 V-0
电流承载部件材料和镀层(Material & Plating of Current carrier)	Copper alloy ，Tin plated
接线弹片材料(Material of Clamp spring)	--
绝缘电阻(Insulation Resistance)	500MΩ or more at DC500V
耐电压(1分钟)(Withstanding Voltage/1Min)	2500V
额定冲击电压(Rated surge voltage)	--
接线螺丝(Wire clamp unit Screw)，最大扭矩(torque Max.)	M3.5， 1.0Nm Max
固定螺丝(Mounting Screw)，扭矩(torque)	--
剥线长度(Wire stripping length)	--
使用温度(Operating temperature)	-40°C up to +105°C
焊接方式(Soldering recommend)	Wave soldering ,260°C 5S Max (Single Wave) , 260°C 10S Max(Double Wave)

订购方式(How to order)

B	950	C	W	—	03	—	XXXX	—	XXP	—	K	C
Series No. 系列号	Pitch间距 P=9.50mm	With cover 带盖子	With flange 带法兰		Solder Pin Spec 焊针规格		Special code 特编号 XXXX=custom-made blank=standard		No. of Poles 极数 02-24P		Color 颜色 Black: K02	Screw Type 螺丝S=Slot C=Cross

Web:wwww.china-tianli.com TEL:+86-574-6347-9600,6389-6436 Mail : sale@china-tianli.cn
地址:中国浙江省宁波杭州湾新区庵东工业园区纬三路138号
ADD：138，Weisan Rd.,Andong Development Zone,Hangzhou Bay Area,Ningbo,Zhejiang,China