FILE: TLM\004\TLM-004VT-5.00-XXP-X

REV	E.C.N NO.	CONTENT	CHK	DATE
V1.0		ORIGINAL	YHZ	2022.06.10

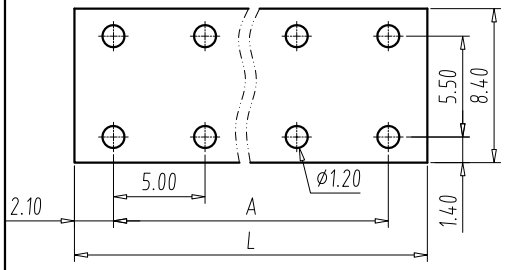

PCB LAYOUT
S=2.5:1

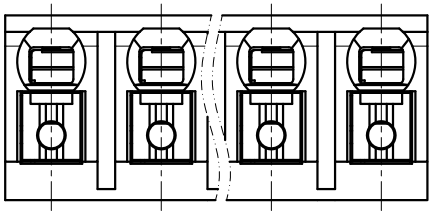

NOTES:
1. UL:
   Rating:300V,12A
   Insulation Withstands Voltage:AC1600V/MIN
   Suitable Electric Wire:28AWG~16AWG
2. IEC:
   Rating:320V,17.5A
   Rate Impulse Voltage:4000V
   Insulation Resistance:500MΩ or more at DC500V
   Contact Resistance:≤5mΩ
   Material Group: I
   Pollution Degree:2
   Overvoltage Category:III
   Suitable Electric Wire:0.2mm²~1.5mm²
3. Using Temperature Range:-40℃~+130℃
4. Strip length:8.0~9.0mm
5. RoHS compliance

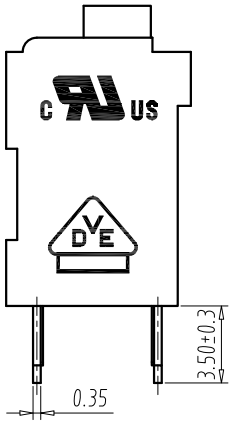

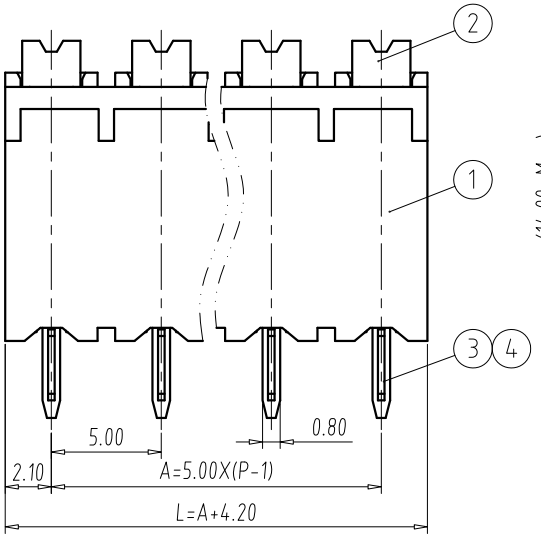

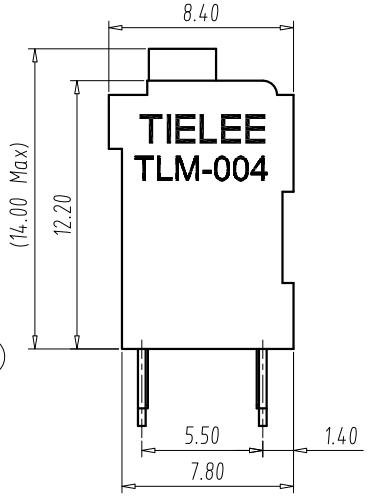

DIM \ P	2	3	4	5	6	7	8	9	10	11	12
A	5.00	10.00	15.00	20.00	25.00	30.00	35.00	40.00	45.00	50.00	55.00
L	9.20	14.2	19.2	24.2	29.2	34.2	39.2	44.2	49.2	54.2	59.2

DIM \ P	13	14	15	16	17	18	19	20	21	22	23	24
A	60.00	65.00	70.00	75.00	80.00	85.00	90.00	95.00	100.0	105.0	110.0	115.0
L	64.2	69.2	74.2	79.2	84.2	89.2	94.2	99.2	104.2	109.2	114.2	119.2

Total Pitch Tolerances in mm									Nominal dimension range in mm								
over 0 to 30	over 30 to 53	over 53 to 70	over 70 to 90	over 90 to 115	over 115 to 150	over 150 to 200	over 200 to 250	over 250 to 320	over 0 to 30	over 30 to 53	over 53 to 70	over 70 to 90	over 90 to 115	over 115 to 150	over 150 to 200	over 200 to 250	over 250 to 320
±0.20	±0.25	±0.30	±0.35	±0.44	±0.55	±0.70	±0.85	±1.00	±0.25	±0.30	±0.35	±0.44	±0.55	±0.70	±0.80	±0.90	±1.20

ITEM	NAME OF PART	Q"TY	MATERIAL	NOTE
4	SOLDER PIN	P	H-Copper Alloy	Tin Plated
3	SPRING	P	Stainless	/
2	LEVER	P	PA-HT	UL94 V-0
1	HOUSING	1	PA-HT	UL94 V-0

DWG.	YHZ	DATE	2020.11.02	UNITS	MM	SHEET/OF	1/1
CHK.		DATE		SCALE	3 : 1	A4	
APP.		DATE		NAME	TLM-004VT-5.00-XXP-X		
TIANLI ELECTRICAL MACHINERY(NINGBO)CO.,LTD.				DWGNO.	TLDW-TLM004VT5.00XXPX		